SpectroCam™

Multispectral Camera | VIS

PIXELTEQ

micro-patterned filters | sensors | cameras

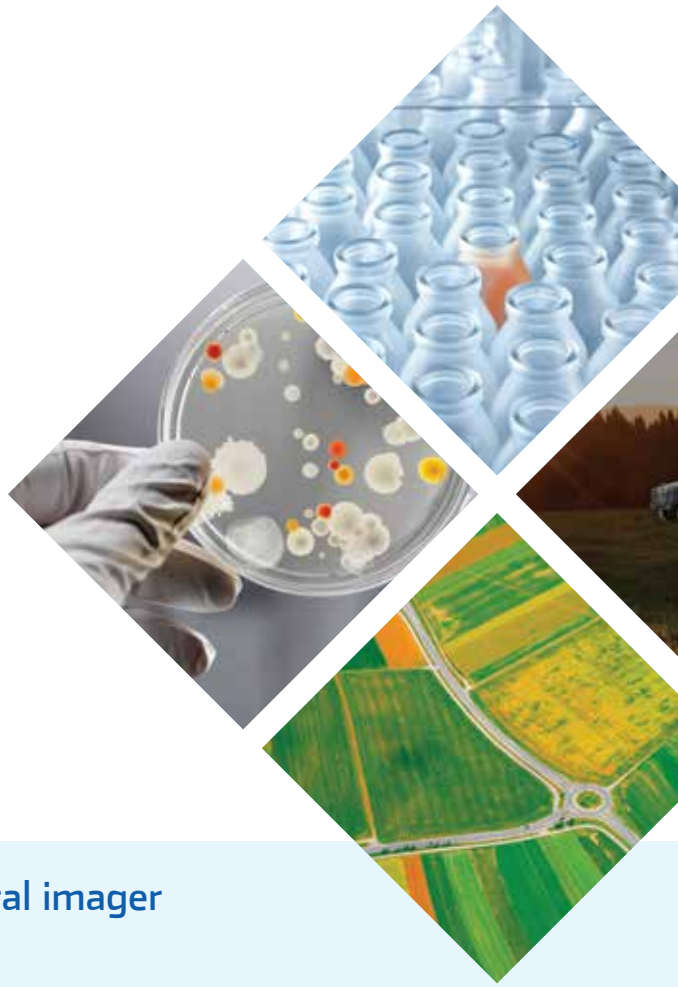

Real-time 8-band multispectral imager

400-1000nm

SpectroCam VIS multispectral cameras deliver live processed images of 8 spectral bands in the visible (VIS) and near infrared (NIR) at full frame resolution and rates up to 20 frames per second (~2-3 stacks per second). Configure the SpectroCam VIS for your application using standard and custom interchangeable optical filters for targeted VIS and NIR spectral bands. The SpectroCam VIS camera incorporates a scientific-grade CCD sensor sensitive between 400-1000nm with 1392 x 1040 resolution. Fully functional out of the box, SpectroCam makes multispectral imaging accessible to any user – speeding the development and deployment of all kinds of multispectral applications. Capture live images within minutes using SpectroCam's included acquisition software to enhance contrast and see beyond human vision. Customized OEM multispectral engines provide easy modular integration into handheld optical devices and instrumentation.

ALAVA INGENIEROS

pixelteq.com

Spectral response

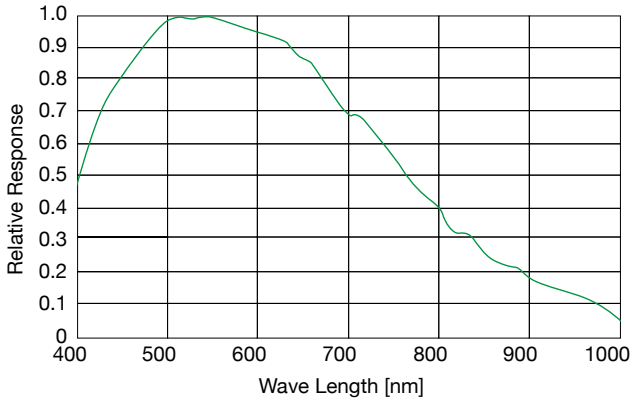

Dimensions

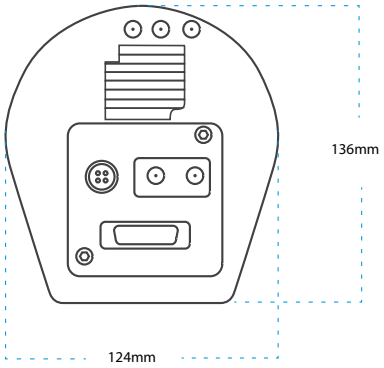

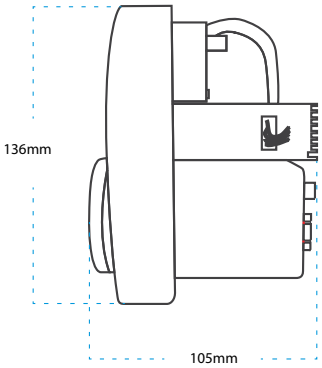

Summary

	SpectroCam VIS
Spectral response	400-1000nm (VIS+NIR)
Sensor	CCD, silicon 1392 x 1040 px 6.45ɥm pixel pitch
Spectral bands	8
Active area	10.2mm H x 8.3mm
Frame rate	up to 20 frames/sec
Optical interface	F mount standard, range of lenses available
Digital output	Gig-E, 12
Dimensions	136mm H x 124mm W x 105mm D (5.4" H x 4.9"W x 4.1" D)

SpectroCam Customizable Options

- 8 band live processed images
- Full frame resolution at up to 20 frames/second
- Interchangeable standard & custom spectral filters
- Intuitive acquisition software

OEM Customization

- Application-specific multispectral engine
- Easy modular device integration
- Optimized spectral bands & imaging
- Proof of concept to high volume production

Applications

SpectroCam is changing the way our clients look at...

- Biometric acquisition
- Grain sorting
- Light microscopy
- Colorimetric assays
- Art & archaeology
- Patient point of care
- Crop health
- Machine vision
- Food grading
- Surgical imaging
- Fluorescence imaging
- Biohazard screening

Acquisition Software

Contact an Application Engineer to discuss your specific application.

+1.303.273.9700 (americas) +86.10.5126.1868 (china) **info@pixelteq.com**
+31 263831707 (europe) +91.22.6708.0420 (india) **pixelteq.com**

ALAVA INGENIEROS PIXELTEQ